Drivetrain Intern Prject

By: Colin Jennings

1. Bearings Sprocket Side

SKF 61911 Deep Groove Ball Bearing

Over 10kN

Performance	
Basic dynamic load rating	14.6 kN
Basic static load rating	10.4 kN
Reference speed	19 000 r/min
Limiting speed	12 000 r/min

- Low Friction
- Lightest option that supports required load

Dimensions	
Bore diameter	55 mm
Outside diameter	80 mm
Width	13 mm

Logistics	
Product net weight	0.189 kg
eClass code	23-05-08-01
UNSPSC code	31171504

Non- Sprocket Side

SKF 61910 Deep Groove Ball Bearing

Performance	
Basic dynamic load rating	14.6 kN
Basic static load rating	10.4 kN
Reference speed	19 000 r/min
Limiting speed	12 000 r/min

- Low Friction
- Less weight to sprocket side

Dimensions	
Bore diameter	50 mm
Outside diameter	72 mm
Width	12 mm

Logistics	
Product net weight	0.137 kg
eClass code	23-05-08-01
UNSPSC code	31171504

Material Choice

Aluminum

- Better strength to weight ratio than steel.

	6061	7075	Verdict
Machinability	Excellent	Difficult	6061 easier to manufacture
Machinability	Excellent	Difficult	6061 easier to manufacture
Ductility / Brittleness	Moderate/ductile	High strength but brittle	6061 safer under impact, allows minor deformation instead of shattering
Strength (Yield)	275 MPa	430 MPa	7075 had higher Yield strength
Cost / Availability	Low / common	High / limited	6061 practical and affordable

Bolt Calculations

Non-Sprocket Side

$\frac{2\,kN}{2} = 1\,kN/bolt$

$\tau = \frac{F}{2A}$

$A = \frac{\pi}{4}d^2$

$A = \frac{F \cdot FOS}{2\tau_s}$

Grade 8 bolt ~620MPa

$A = \frac{1.2}{2 \cdot 620}$

$A = \frac{2000}{1200} = 1.61\,mm^2$

$d = \sqrt{\frac{4(1.61)}{\pi}}$

$d = 1.43\,mm$ - min

Sprocket Side

$5\,kN/bolt$

$A = \frac{5000 \cdot 2}{2 \cdot 620}$

$A = \frac{5000}{620}$

$A = 8.06\,mm^2$

$d = \sqrt{\frac{4(8.06)}{\pi}}$

$d = \sqrt{10.26}$

$d \approx 3.2\,mm$

Ideal bolt

#8-32 grade 8

~4.17m

Diff Plates Force-Deflection Simulations

Ideal Dimension Deflection

2kn side
Max Deflection
~.06mm
Weight: ~142.6g

10kn side
Max Deflection
~.149mm
Weight: ~253.2g

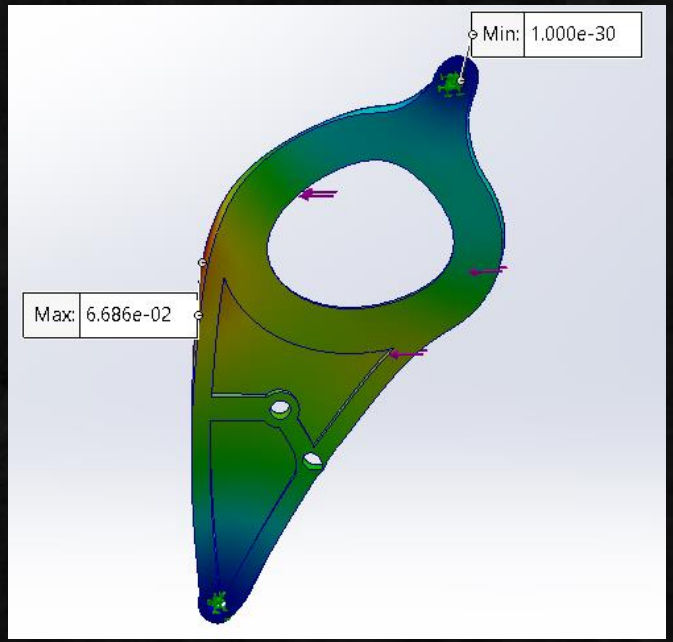

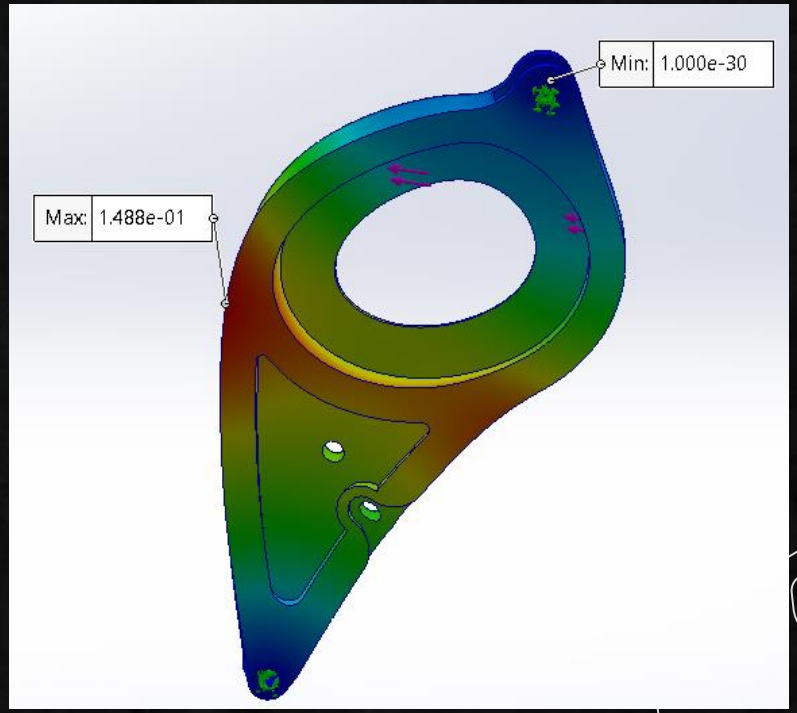
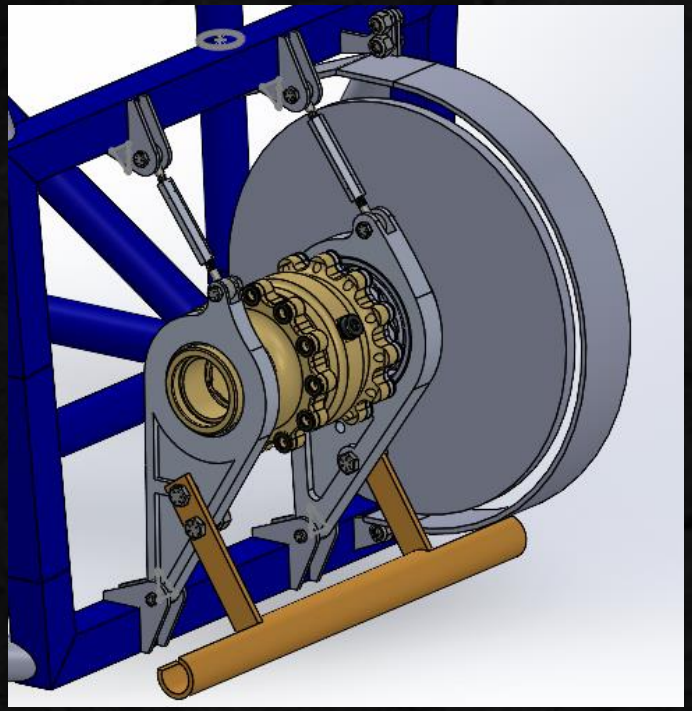
Assembly